EP·08·223-2

GENERAL NOTES

1. ALL WORK SHALL CONFORM to these plans and special provisions for this project.
2. REFER TO THE final map of this subdivision for all centerline and property line data.
3. THE CONTRACTOR SHALL receive an approved set of plans and specifications prior to beginning construction.
4. BAUMBACH & PIAZZA (Engineer) shall set all survey controls and construction stakes necessary for completion of work. The Contractor shall be responsible for the preservation of all survey and construction stakes. Survey and construction stakes that are lost or destroyed, due to Contractor's negligence will be reset by the Engineer at the Contractor's expense.
5. THE EXISTING UNDERGROUND utilities were plotted from avaliable records. The Contractor shall be responsible for contacting all utility agencies to mark their facilities in the field before any excavation. The Contractor shall notify and coordinate all work with any agency requiring removal or relocation of their utilities. S.B.C., P.G.& E., Cable T.V., and U.S.A. (800) 227-2600.
6. HOUSE SERVICES, fire hydrant laterals and street light conduit shall be installed prior to curb and gutter construction. All underground utilities within the street area, including gas and telephone lines, shall be installed prior to paving.
7. ALL MANHOLES are to be set flush with the finsh grade, unless otherwise indicated.
8. ALL WATER LINES shall have a minimum cover of 30".
9. WATER USED in any phase of construction, such as backfill compaction, dust control testing or other work herein required, shall be included in the unit price or lump sum bid for the respective item of construction. Contact SJC for meter.
10. CONTRACTOR AGREES THAT he shall assume sole and complete responsibilty for job site conditions during the course of construction of this project, including safety for all persons and property; that this requirement shall apply continuously and not be limited to normal working hours and that Contractor shall defend, indemnify, and hold the Owner, Project Engineer, San Joaquin County (SJC) harmless from any and all all liability, real or alledged in connection with the performance of work on this project, excepting for liability arising from the sole negligence of the Owner, Project Engineer, San Joaquin County (SJC) .
11. CONTRACTOR SHALL give Engineer a minimum of 48 hours notification prior to staking any utilities.
12. SANITARY SEWER SERVICES shall be marked by the Contractor on the curb & gutter with an "S" stamped on the top of curb.
13. WATER SERVICES shall be marked by the Contractor with a "W" on the curb. Location of water markings shall be verified in the field by the Engineer.
14. LOT GRADING SHALL be completed before starting any underground construction. Refer to attached grading plan.
15. SEPARATION OF WATER and sewer mains (including crossings) and sewer laterals crossing over water mains shall meet or exceed the latest standards of the State of California Department of Health Services.
16. WHERE THE WATER crosses SD or SS use an 18-20 foot length of C900-CL 200 pipe, centered over the SS or SD if; a)the water is under the SS or SD. b)the vertical clearance is less than 1 foot.
17. ALL WATER LINES shall be disinfected, flushed and tested for bacteria in conformance with the AWWA C601 prior to connecting to existing water line. The number of bacterological tests shall be determined by SJC staff. SJC is responsible for inspection and testing of the stormwater system.

17a. ALL WATER LINES shall be pressure tested per the latest SJC standards. Pipelines failing pressure test shall be repaired and retested. Contractor to provide all necessary equipment for testing and provide at least 48 hours notice to SJC.

18. ALL STORM DRAINS shall be cleaned prior to final acceptance.
19. THE CONTRACTOR SHALL visit the site prior to bidding. Specifications are a separate document.
20. NEW TRAFFIC STRIPING and the removal and restoration of any damaged existing painted legend or signs is the responsibility of the contractor and shall be included in his bid price.
21. THE CONTRACTOR SHALL be responsible for notifying and co-ordinating all work with any agency requiring removal or relocation of utilities such as S.B.C., P.G.&E., etc.
22. NO MATERIALS RESULTING from tapping procedures may enter public sewer.
23. ALL WORK WILL be inspected by the Department of Public Works. The agencies shall be notified not less than 48 hours in advance for inspection.
24. IT IS AGREED that field conditions may require changes to these plans. It is further agreed that the SJC may require changes, alterations or additions to these plans, when the Director deems them to be necessary or desirable for the proper completion of the work.
25. FIRE HYDRANT BID shall include the following: Tee, 6"lateral, 6"valve and complete fire hydrant assembly.
26. THE CONTRACTOR SHALL notify the LCSD for approval prior to connecting the water line to existing water main. Backflow prevention device is to be certified.
27. PIPE TYPE and strengths allowed for underground utilities, unless otherwise specified on plans, are as follows: Storm Drain (SD)=RCP CL III or PVC (SDR35); Sanitary Sewer (SS)=PVC per ASTM D3034 minimum, SDR 35; Water (W)=PVC CL.150 or greater per AWWA Std. C-900.
28. All traffic signs and markings shall conform to the San Joaquin County Standards, "Manual on Uniform Traffic Control Devices and Traffic Control Plans" and the latest edition of Caltrans Traffic Manual.
29. ANY CHANGES TO the approved Improvement Plans and Specifications must be prepared and certified by the "Civil Engineer" and shall be approved by the "Director" prior to implementation.
30. ALL MATERIALS USED as sanitary sewer system must have written approval from the District Engineer prior to installation.
31. THE CONTRACTOR shall coordinate a preconstruction meeting between himself, the Engineer, the Public Agencies, and Public Utilities at least 48 hours prior to commencing work.
32. Install a reflective, blue marker near the center line of the street to denote the fire hydrant location.
33. Material sampling and testing shall be the responsibility of the contractor. All results shall be sent to the County Inspector.
34. The Contractor shall obtain an Encroachment Permit from SJC for all work within the existing street right-of-way.
35. For Water Main under a Sanitary Sewer Lateral crossing, a 20 foot length of Class 200 (C-900) pipe shall be installed and centered at the sewer crossing. The vertical separation shall be four inches minimum.
36. The Contractor shall obtain a grading permit from the SJC Building Division.
37. The owner shall have compaction tests taken for street subgrade, utility trenches and lot fill. Any required retests will be at the contractor's expense. Sanitary Sewer trench compaction tests shall be done by a qualified soils testing laboratory. The Contractor shall call for tests and submit the results to the County as soon as possible. Soils that fail compaction testing shall be removed, recompacted and treated at the contractors expense.
38. All construction and materials shall be in accordance with the latest edition of the San Joaquin County Improvement Standards.
39. Final pavement work shall not occur within the road right-of-way prior to completion of utility relocation without specific approval of the Director.
40. A Traffic Control Plan (TCP) shall be submitted to and deemed acceptable by County at a minimum of two (2) weeks prior to start of work. This shall address all phases of work, which will impact public traffic. Conformance with the TCP shall be maintained at all times.
41. Whenever pavement is broken or cut in the installation of the work covered by the specifications, the pavement shall be replaced after proper backfilling with pavement materials equal to or better than the materials used in the original paving.
42. Drainage facilities shall be maintained during periods of inclement weather and restored to their original conditions upon completion of work.
43. Contractor shall verify all street names with San Joaquin County Community Development Department before ordering street signs.
44. All references to Standard Plan Details are San Joaquin County Standard Plans, unless otherwise noted.

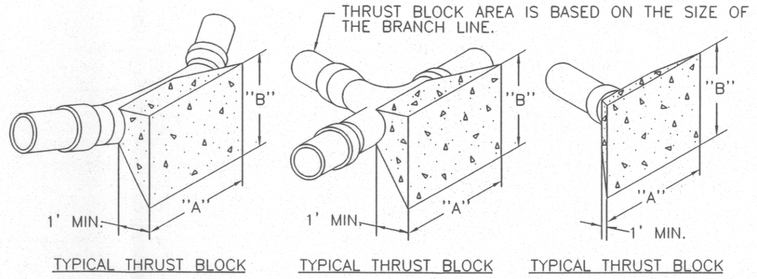

THRUST BLOCK CHART

(No Scale)

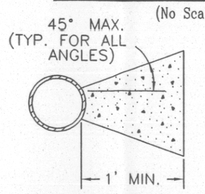

TYPICAL SECTION THRU THRUST BLOCK

THRUST BLOCK AREA REQUIRED		
FITTINGS	ALLOWABLE SOIL BEARING 1000 LBS. PER SQ. FT.	
6" LINE OR SMALLER	"A"	"B"
22 1/2°	1'-6"	1'-6"
45°	2'-0"	2'-0"
90°	3'-0"	2'-6"
TEE OUTLET	2'-6"	2'-0"
DEAD END	2'-6"	2'-0"
8" LINE		
22 1/2°	2'-0"	2'-0"
45°	3'-0"	2'-6"
90°	4'-0"	3'-0"
TEE OUTLET	3'-0"	3'-0"
DEAD END	3'-0"	3'-0"
10" LINE		
22 1/2°	3'-0"	2'-0"
45°	3'-6"	3'-0"
90°	5'-0"	4'-0"
TEE OUTLET	4'-0"	3'-6"
DEAD END	4'-0"	3'-6"
12" LINE		
22 1/2°	3'-0"	3'-0"
45°	4'-0"	4'-0"
90°	7'-0"	4'-0"
TEE OUTLET	5'-0"	4'-0"
DEAD END	5'-0"	4'-0"

NOTES:

1. ALL THRUST BLOCKS SHALL BE POURED AGAINST UNDISTURBED SOIL.
2. RESTRAINT SYSTEM FOR VERTICAL PIPE BENDS SHALL BE APPROVED BY THE AGENCY.
3. THRUST RESTRAINT SYSTEMS FOR PIPES LARGER THAN 12" SHALL BE DESIGNED ON A CASE BY CASE BASIS AND SHALL BE APPROVED BY THE AGENCY.
4. CONCRETE SHALL BE CLASS B.

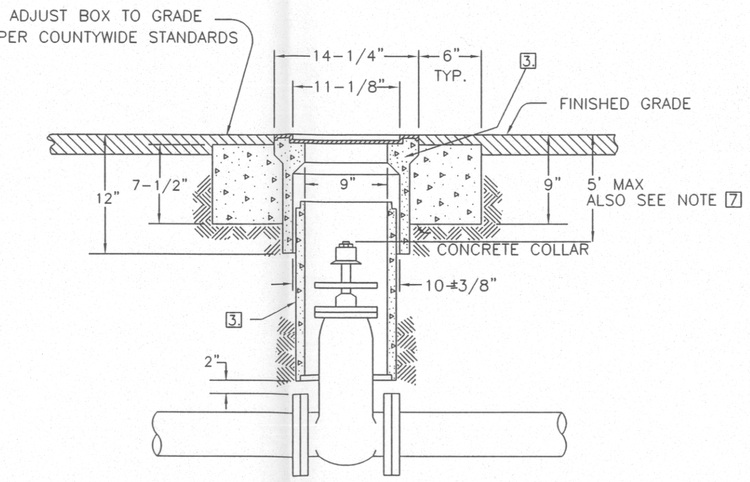

VALVE BOX DETAIL

(No Scale)

NOTES:

1. VALVE BOX AND LID SHALL BE CHRISTY NO. G5 OR AS APPROVED BY THE AGENCY.
2. ALL LIDS SHALL HAVE MACHINED SEATING SURFACES.
3. VALVE BOX RISERS SHALL BE AS MANUFACTURED FOR THE VALVE BOX SUPPLIED. VALVE BOX RISER TO BE ONE CONTINUOUS PIECE AND CENTERED ON VALVE. SHOULD BE RISER OR 8" ø, CLASS 100 PVC. SEE NOTE 5.
4. FOR BLOWOFF INSTALLATION, REFER TO DRAWING NO. CW-W6.
5. ALTERNATIVE VALVE BOX AND RISERS MAY BE USED WHERE APPROVED BY THE AGENCY.
6. CONCRETE COLLAR NOT REQUIRED WHEN VALVE BOX IS LOCATED IN CONCRETE SIDEWALK AREA.
7. VALVE STEM EXTENSIONS MAY BE USED TO COMPLY WITH 5' MAX. DISTANCE FROM GRADE TO NUT.
8. TRACE WIRE MAY BE USED WHERE APPROVED BY AGENCY.

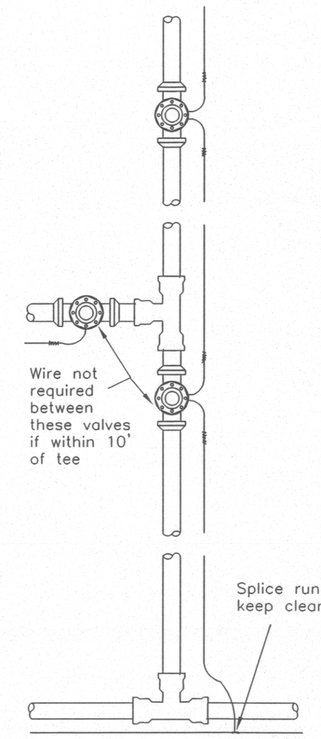

TYPICAL LAYOUT

NOTES:

1) Wire to be continuous between valve boxes, except as noted.
2) Bare wire not to touch valves or fittings.
3) Locating wire to be laid at bottom of trench, next to pipe.

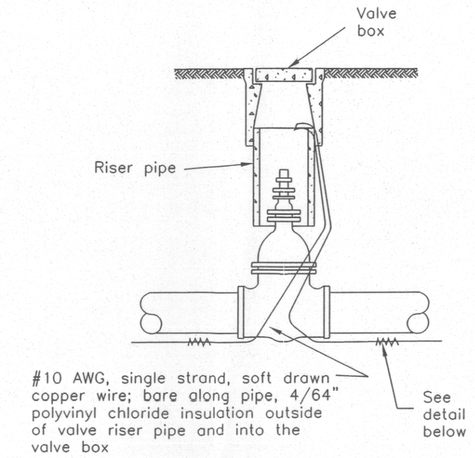

VALVE DETAIL

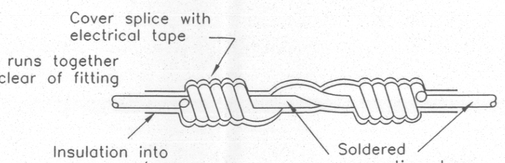

SPLICE DETAIL

LOCATOR WIRE INSTALLATION

(No Scale)

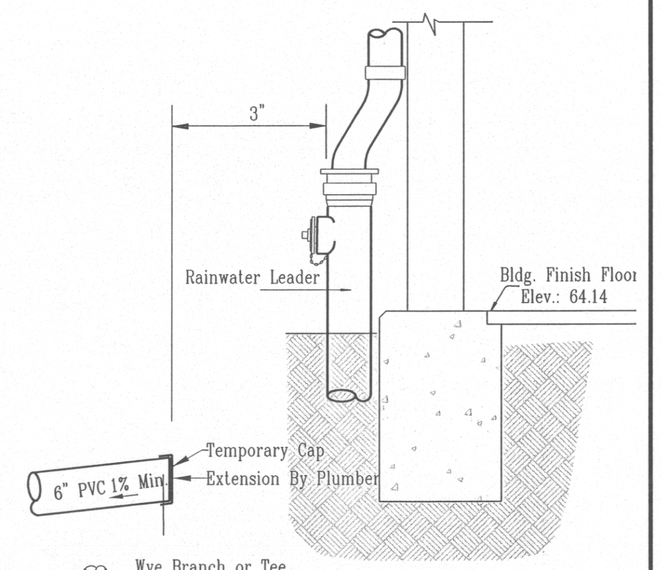

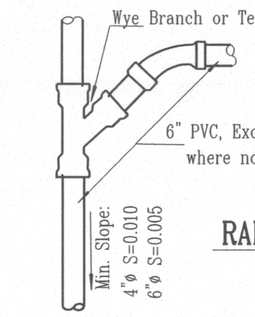

RAINWATER DRAIN DETAIL

(No Scale)

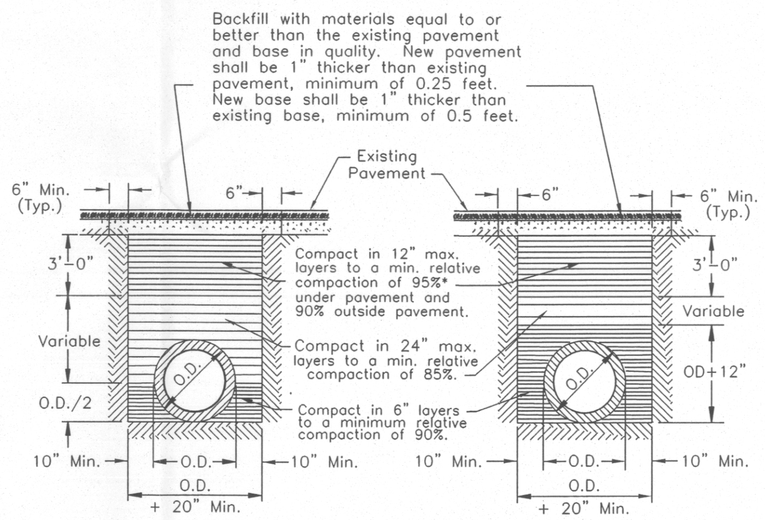

TYPICAL TRENCH BACKFILL

(No Scale)

NOTES:

1. Relative compaction of materials shall be tested in accordance with the State of California, Dept. of Transportation Testing Manuals, test method No. California 216 or 231.
2. All existing pavement shall be neatly cut to line prior to trench excavation.
3. Jetting or ponding will be permitted within the street Right of Way with a 3 year bond.
4. When shown by soil composition and compactability, ninety percent (90%) compaction may be used, when approved by the Director of Public Works.
5. Special bedding requirements may be shown on the plans or specified in special provisions.
6. Shoulders shall be as shown on the plans or specified in the special provisions but in no case shall the shoulder be less than three feet wide as measured from the edge of pavement.

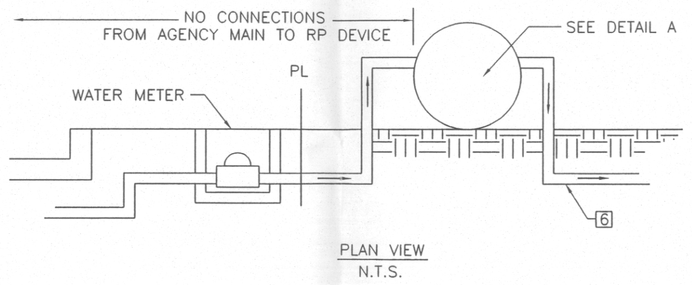

PLAN VIEW
N.T.S.

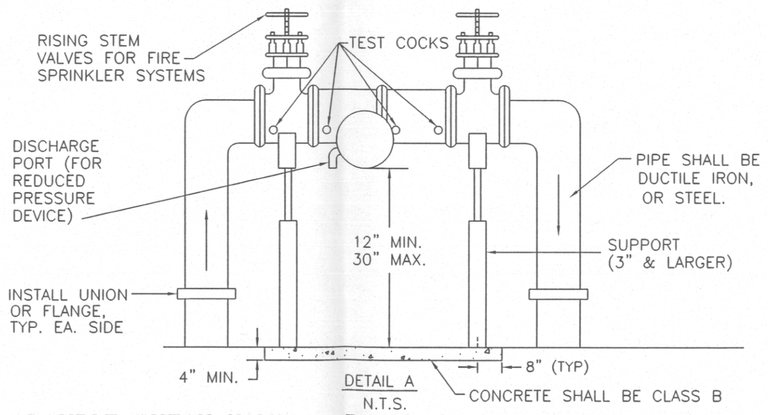

DETAIL A
N.T.S.

DOUBLE CHECK VALVE & BACKFLOW PREVENTION DEVICE

(No Scale)

NOTES:

1. INSTALLED DEVICE MUST BE ON AGENCY APPROVED BACKFLOW PREVENTION DEVICE LIST.
2. DEVICE SHALL BE INSTALLED ABOVE GROUND.
3. TEST COCKS AND SHUT-OFF VALVES MUST BE SUPPLIED AND INSTALLED AS SHOWN.
4. DISCHARGE PORT MUST BE KEPT CLEAR OF OBSTRUCTION AT ALL TIMES.
5. ANY DEVIATION FROM THE INSTALLATION SHOWN ABOVE MUST RECEIVE PRIOR APPROVAL.
6. ALL PIPING & APPURTENANCES SHALL BE AWWA RATED 200 PSI FOR FIRE SPRINKLER SYSTEMS.
7. AGENCIES MAY REQUIRE INSULATION TO PREVENT FREEZING OF EXPOSED PIPE.
8. VALVES FOR FIRE SPRINKLER SYSTEMS SHALL BE CHAIN LOCKED IN AN OPEN POSITION AT ALL TIMES.

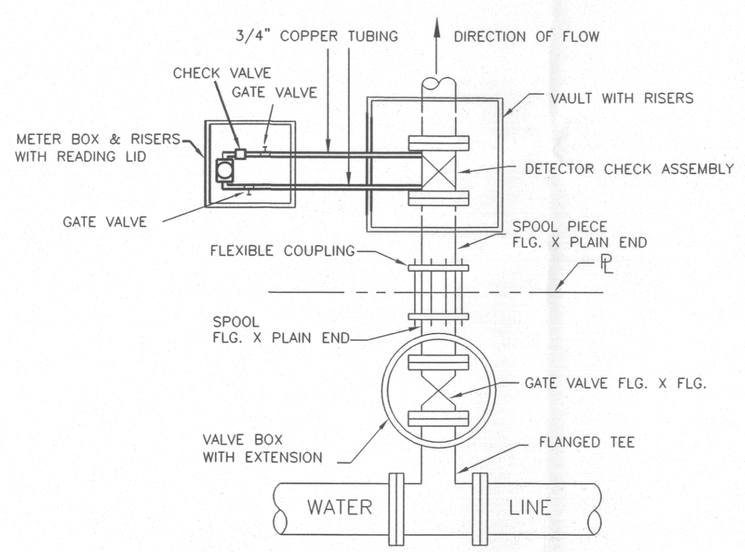

PLAN

METER ASSEMBLY DETECTOR CHECK VALVE

(No Scale)

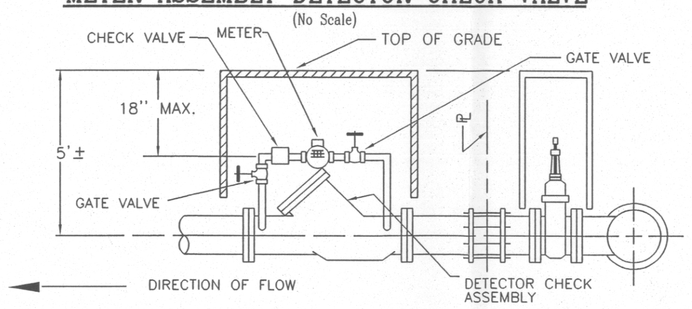

SECTION

Model DGO 646-R Perforated (Reinforced) Galvanized Steel Grate for Light Vehicle Traffic & Meeting A.D.A. Standards

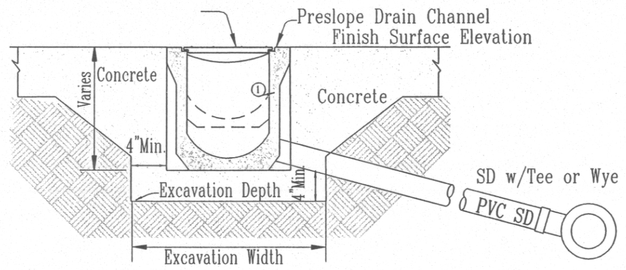

① "Quarzite" Polycast Preslope Area Drain System Series 600 (Ph: 1.650.992.7100) or approved equal Install per manufacturers requirements. Submit Product Specifications prior to ordering.

TRENCH DRAIN DETAIL

(No Scale)

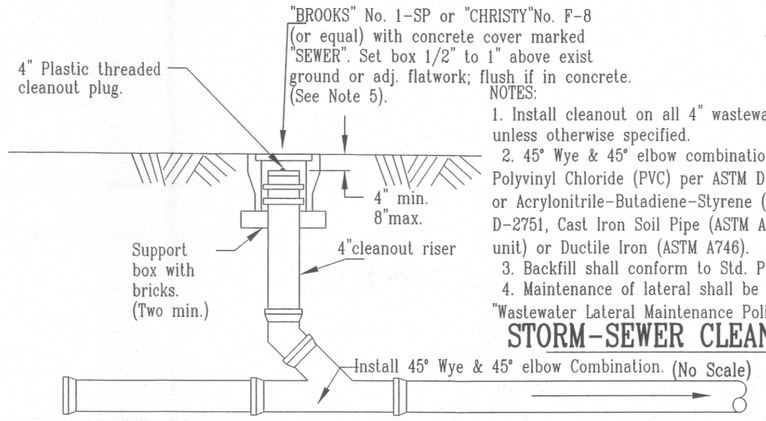

(No Scale)

NOTES:

1. Install cleanout on all 4" wastewater services unless otherwise specified.
2. 45° Wye & 45° elbow combination shall be Polyvinyl Chloride (PVC) per ASTM D-3034 SDR 35 or Acrylonitrile-Butadiene-Styrene (ABS) per ASTM D-2751, Cast Iron Soil Pipe (ASTM A74, service unit) or Ductile Iron (ASTM A746).
3. Backfill shall conform to Std. Plan 506.
4. Maintenance of lateral shall be per City "Wastewater Lateral Maintenance Policy"

STORM-SEWER CLEANOUT DETAIL

REGISTERED PROFESSIONAL ENGINEER STEVEN E. PECHIN NO. 42764 CIVIL STATE OF CALIFORNIA 3/31/08

1-17-08

CALL TOLL FREE BEFORE YOU DIG 800-227-2600 USA P.G.&E. CITY UTILITIES

CAUTION!! 0 ½ 1 DO NOT SCALE THIS DRAWING IF BAR DOES NOT MEASURE 1 INCH.

REVISIONS	NO.	DESCRIPTION	COUNTY APPROVAL APPROVED BY	DATE

Flag City ARCO - Carwash Addition

PUBLIC WATER MAIN-DETAIL AND NOTES PLAN

PREPARED IN THE OFFICE OF:
BAUMBACH & PIAZZA, INC.
CIVIL ENGINEERS
323 WEST ELM STREET
LODI, CALIFORNIA 95240
DESIGNED UNDER THE SUPERVISION OF:
STEVEN E. PECHIN
DESIGN ENGINEER

DATE: 1-17-08
R.C.E. NO.: 42764
EXP DATE: 3/31/08

DRAWN BY: E.S., SEP
SCALE: AS NOTED
SHEET 2 OF 3
JOB NO. 07014
FILE NO. G-1353

S:\PROJECTS\2007\07014\dwg\07014_SJCO_2_DETAIL.dwg 01/17/08 9:18am-SPECHIN-XREFS: 07014_9917TS-N.DWG 07014_0229-TM-LLA.DWG 07014_topo.dwg 24x36_SJCo.dwg